Mounting surfaces and cavities for cartridge valves

1 **CAVITIES DIMENSIONS for 2 WAY and 3 WAY CARTRIDGE VALVES type CART-LEH, CART-LEHM [mm]**

CAVITY for CART-LEH 2 way

cavity dimensions

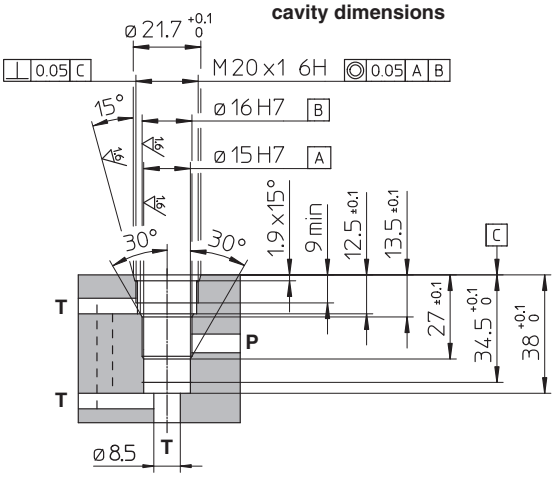

cavity edges and P, A, B, T connections

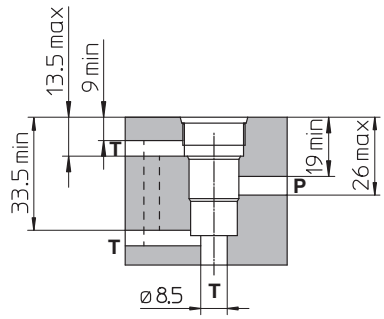

CAVITY for CART-LEH 3 way

cavity dimensions

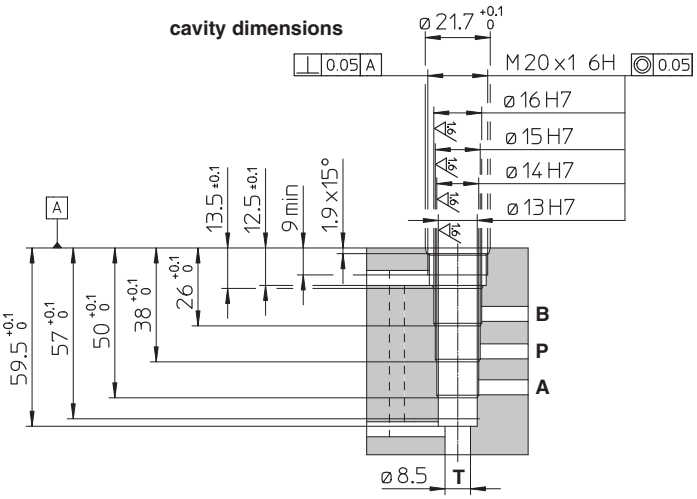

cavity edges and P, A, B, T connections

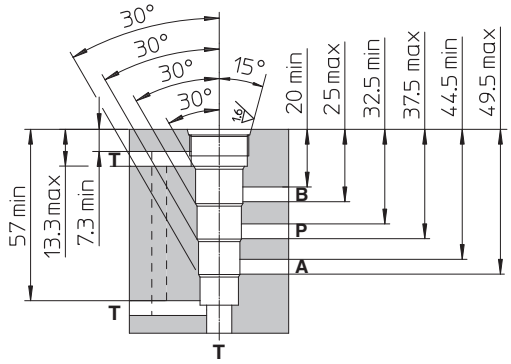

CART-LEHM 3 way

cavity dimensions

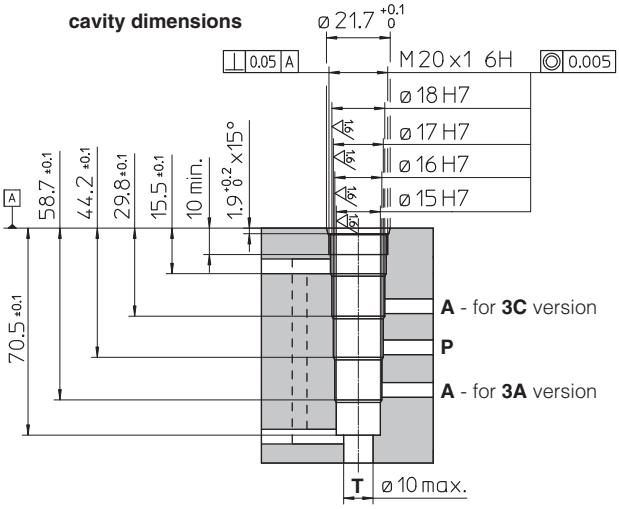

cavity edges and P, A, T connections

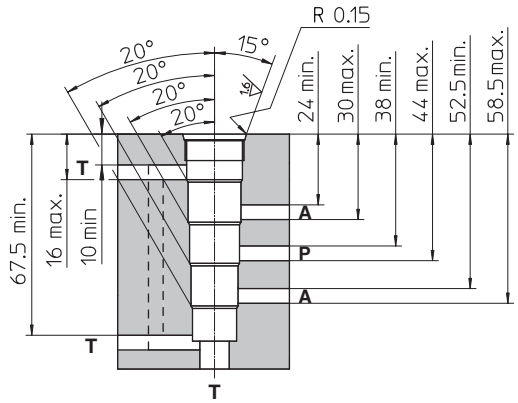

2 CAVITIES DIMENSIONS for 2 WAY and 3 WAY EX-PROOF CARTRIDGE VALVES type CART-LAH [mm]

CAVITY for CART-LAH 2 way

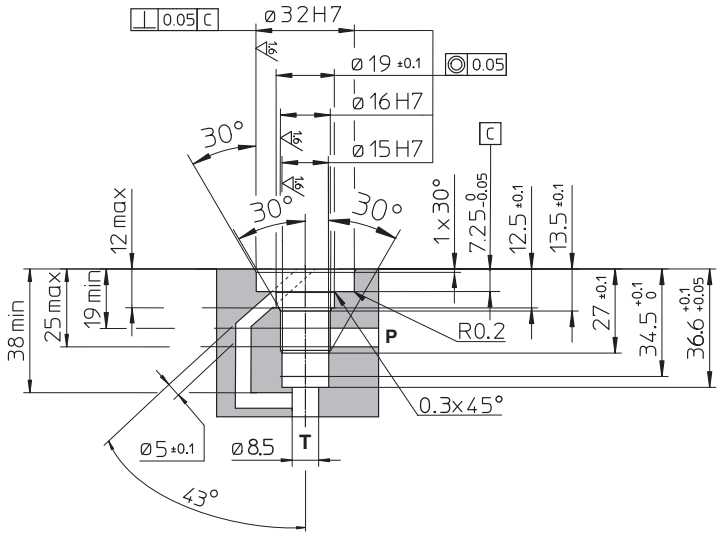

CAVITY for CART-LAH 3 way

cavity dimensions

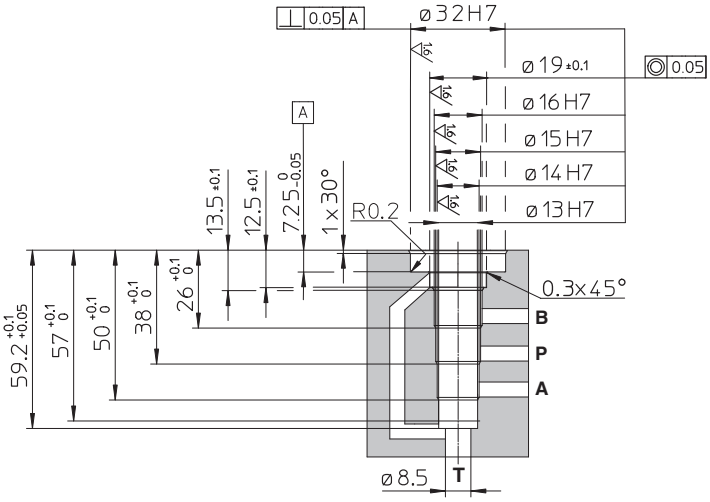

cavity edges and P, A, B, T connections

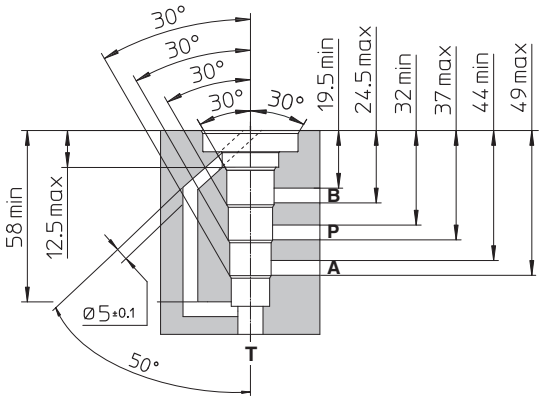

MOUNTING SURFACE for CART-LAH 2 and 3 way

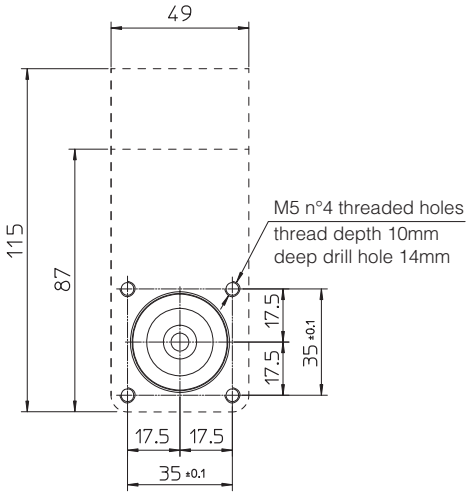

3 CAVITIES DIMENSIONS for 3 WAY EX-PROOF CARTRIDGE VALVES type CART-LAHM [mm]

CAVITY for CART-LAHM-3A

cavity dimensions

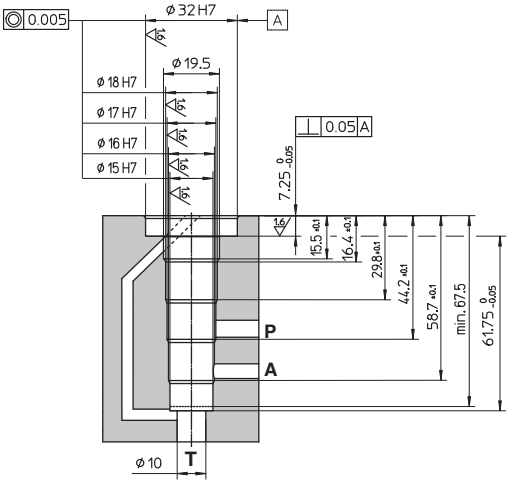

cavity edges and P, A, T connections

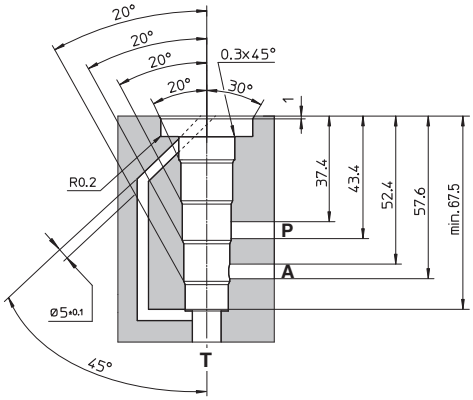

CAVITY for CART-LAHM-3C

cavity dimensions

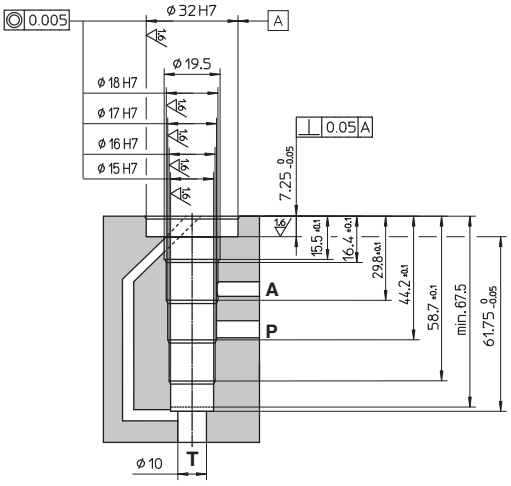

cavity edges and P, A, T connections

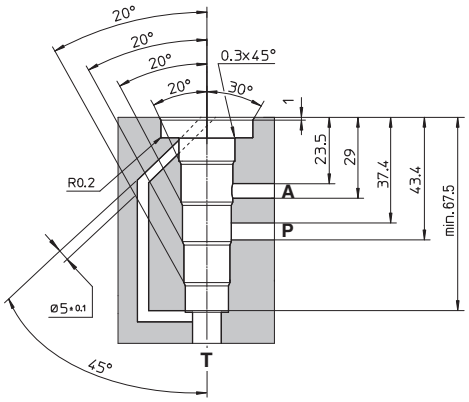

MOUNTING SURFACE for CART-LAHM 3 way

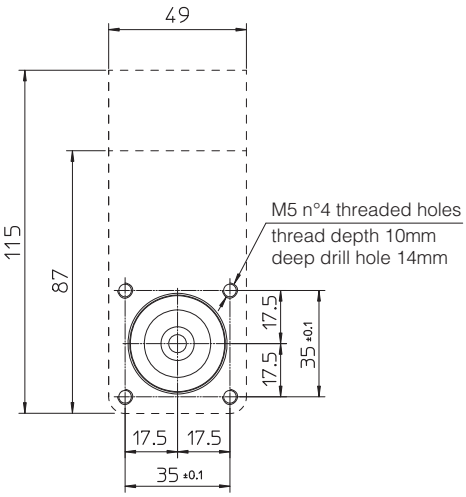

4 CAVITIES DIMENSIONS for CARTRIDGE PRESSURE RELIEF VALVES type CART [mm]

CART M-3
CART MX(S)-3

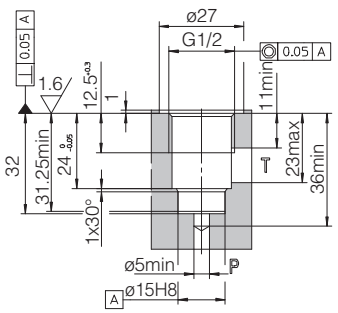

CART M-4

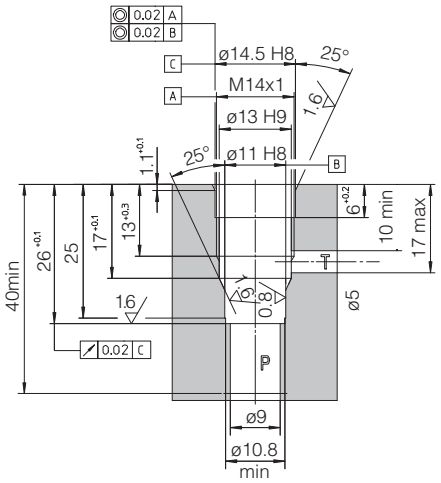

CART M-5

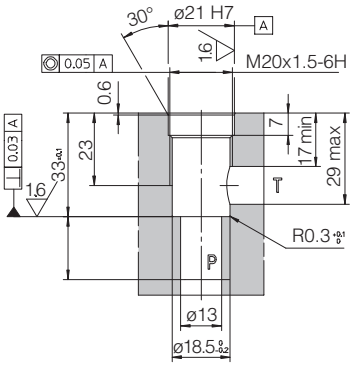

CART M-6
CART MX(S)-6

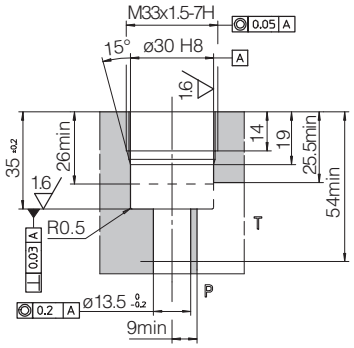

CART ARE-20
CART AREX(S)-20

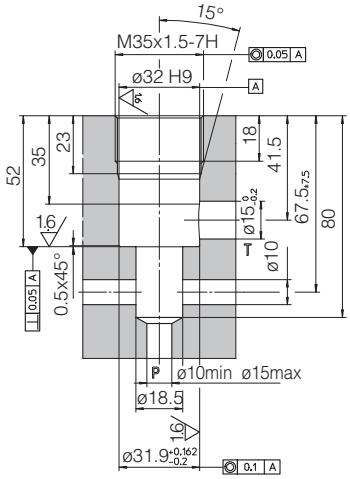

5 CAVITIES DIMENSIONS for 2 WAY SOLENOID CARTRIDGE VALVES type JO-DL [mm]

Note: cavity compatible with old cartridge series

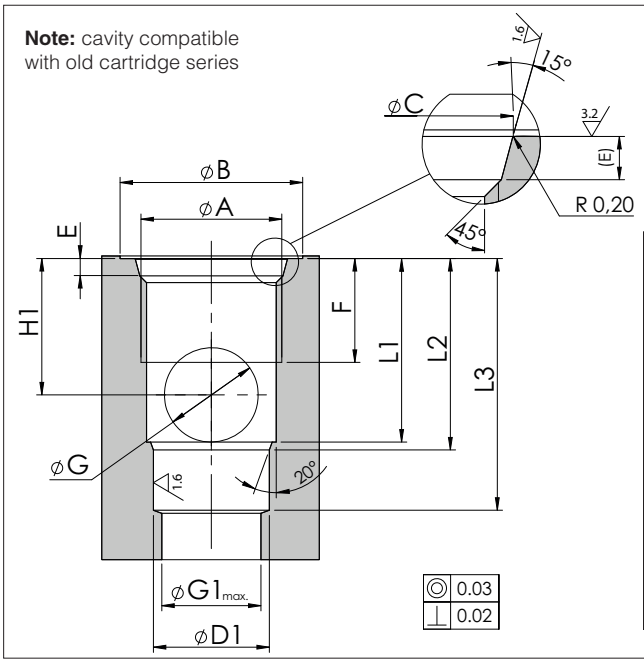

	JO-DL-4-2	JO-DL-6-2	JO-DL-10-2
A	3/4-16 UNF	7/8-14 UNF	1 5/16-12 UNF
B	26	30	42
C	$20.6^{+0.1}_{0}$	$23.9^{+0.1}_{0}$	$35.5^{+0.1}_{0}$
D1	$12.7^{+0.05}_{0}$	$15.87^{+0.05}_{0}$	$28.60^{+0.05}_{0}$
E	$2.6^{+0.3}_{0}$	$2.6^{+0.3}_{0}$	$3.3^{+0.3}_{0}$
F	13	15	20
G	9	12	19
G1	12	15	24
H1	14	18	25
L1	19.1	24.2	33.5
L2	20.5	25.5	36
L3	29	34.5	49

6 ISO 7368 COVER INTERFACE DIMENSIONS for 2 WAY and 3 WAY CARTRIDGE VALVES [mm]

Size from 16 to 63

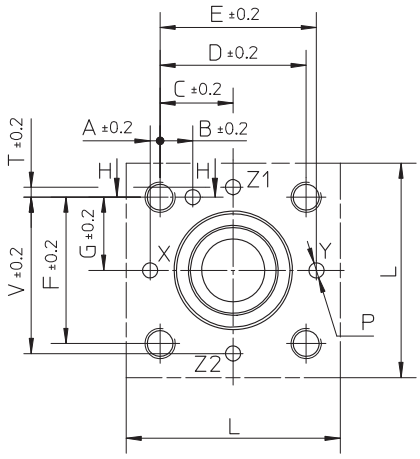

VALVE TYPE

on off
LIM
LIMX(S)
LIR
LIC
LIQV
LIDD
LIDEW
LIDBH
LIDO
LIDB
LIDR
LIDAS

proportional
LIQZO-T*
LIQZO-L* 2 way
LIQZO-L* 3 way
LIQZP-L* 2 way
LIQZP-L* 3 way
LIQZH-L* 2 way
LIQZA-L* 2 way
LIQZA-L* 3 way

Note: port Z1 and Z2 not used in LIQZ*

SEZ.H-H

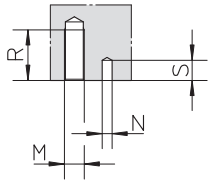

Size 80 and 100

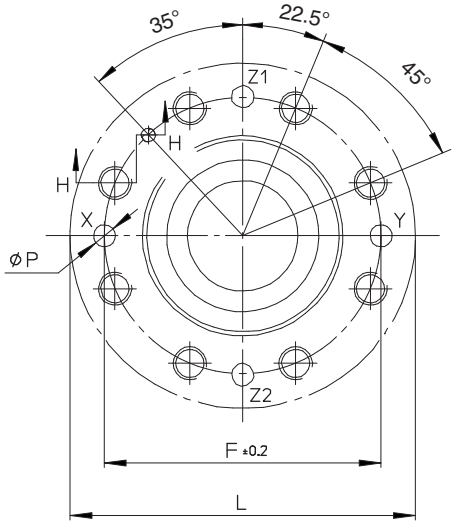

Size 125

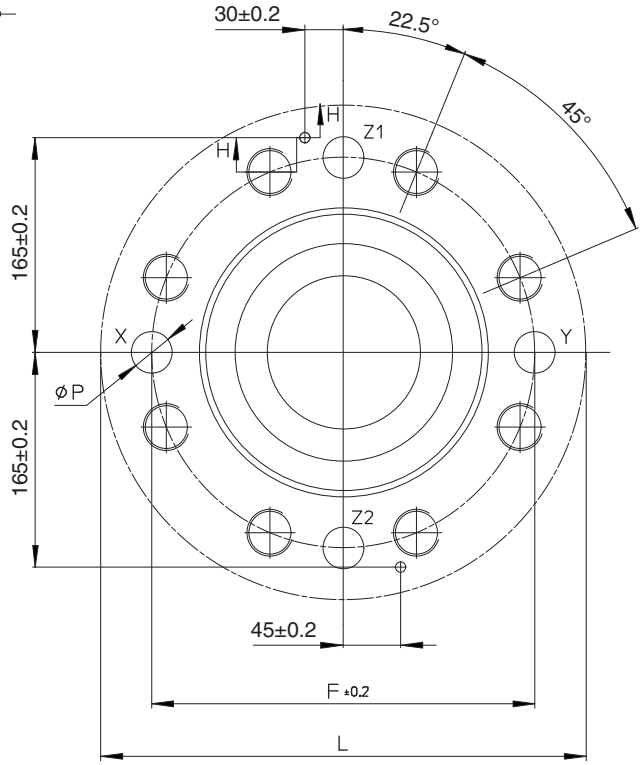

Size	A	B	C	D	E	F	G	L min	M	Ø N	P max	R	S min	T	V
16	2	12,5	23	46	48	46	23	65	M8	4	4	20	6	2	48
25	4	13	29	58	62	58	29	85	M12	6	6	30	8	4	62
32	6	18	35	70	76	70	35	102	M16	6	8	38	8	6	76
40	7,5	19.5	42.5	85	92.5	85	42,5	125	M20	6	10	46	8	7.5	92.5
50	8	20	50	100	108	100	50	140	M20	8	10	46	8	8	108
63	12.5	24.5	62.5	125	137,5	125	62.5	180	M30	8	12	66	8	12.5	137.5
80	-	-	-	-	-	Ø200	-	Ø250	M24	10	16	50	10	-	-
100	-	-	-	-	-	Ø245	-	Ø300	M30	10	20	63	10	-	-
125	-	-	-	-	-	Ø300	-	Ø380	M36	8	32	78 (64.8 min)	10		

7 ISO 7368 CAVITIES DIMENSIONS for 2 WAY CARTRIDGE VALVES [mm]

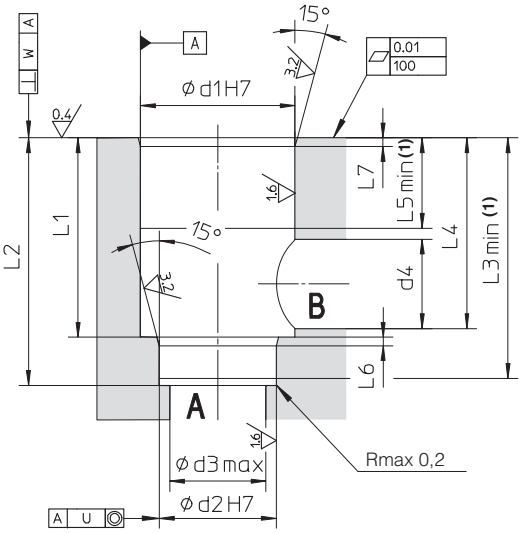

VALVE TYPE

on off

SC LI-*
SC LIX-*
LIDAS

proportional

LIQZO-T*
LIQZO-L* 2 way
LIQZP-L* 2 way
LIQZA-L* 2 way

(1) Minimum length over which the specific surface finish and H7 tolerance shall apply

For sizes 16÷63 the dimension D4max is the difference between L4 and L5min

General Tolerances ISO 2768-mH (except chamfers and radius)

Size	ød1	ød2	ød3 max	ød4 max	L1	L2	L3	L4	L5	L6	L7	U	W
16	32	25	16	22,5	$43^{+0,1}_{0}$	$56^{+0,1}_{0}$	54	42,5	20	2	2	0,03	0,05
25	45	34	25	27	$58^{+0,1}_{0}$	$72^{+0,1}_{0}$	70	57	30	2,5	2,5	0,03	0,05
32	60	45	32	38,5	$70^{+0,1}_{0}$	$85^{+0,1}_{0}$	83	68,5	30	2,5	2,5	0,03	0,1
40	75	55	40	54,5	$87^{+0,1}_{0}$	$105^{+0,1}_{0}$	102	84,5	30	3	3	0,05	0,1
50	90	68	50	62,5	$100^{+0,1}_{0}$	$122^{+0,1}_{0}$	117	97,5	35	3	3	0,05	0,1
63	120	90	63	87	$130^{+0,1}_{0}$	$155^{+0,1}_{0}$	150	127	40	4	4	0,05	0,2
80	145	110	80	100	$175^{+0,2}_{0}$	$205^{+0,2}_{0}$	200	170,5	40	5	5	0,05	0,2
100	180	135	100	120	$210^{+0,2}_{0}$	$245^{+0,2}_{0}$	239	205,5	50	5	5	0.05	0.2
125	225	200	150	125	$257^{+0,2}_{0}$	$300^{+0,2}_{0}$	288	255	50	7	5.5	0.05	0.1

8 CAVITIES DIMENSIONS for 3 WAY CARTRIDGE VALVES [mm]

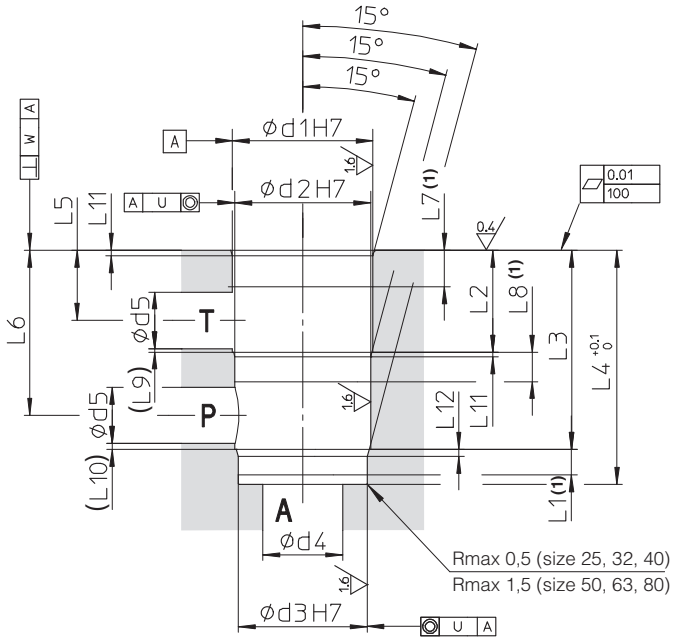

VALVE TYPE

proportional

LIQZO-L* 3 way
LIQZP-L* 3 way
LIQZA-L* 3 way

(1) Minimum length over which the specific surface finish and H7 tolerance shall apply

General Tolerances ISO 2768-mH (except chamfers and radius)

Size	ød1	ød2	ød3	ød4	ød5	L1	L2	L3	L4	L5	L6	L7	L8	(L9)	(L10)	L11	L12	U	W
25	45	43	34	20	20	12,5	56	89	103	45	78	25	15	1	1	2,5	2,5	0,03	0,05
32	60	58	55	32	24	14	43,5	85	100	30	70,5	18	15	1,5	2,5	2,5	2,5	0,03	0,05
40	75	73	55	40	30	17,5	54	105	125	36	87	21	18	3	3	3	3	0,03	0,05
50	90	87	68	50	35	18,5	87	143	165	66	122	48	18	3,5	3,5	4	3	0,03	0,05
63	120	116	90	63	48	26,5	85	165	195	57	137	33	28	4	4	4	4	0,03	0,05
80	145	140	110	80	60	26,5	125	215	245	90	180	60	25	5	5	5	5	0,03	0,05

9 ISO 7368 COVER INTERFACE DIMENSIONS for 2 WAY LIQZH CARTRIDGE VALVES [mm]

Size from 50 and 63

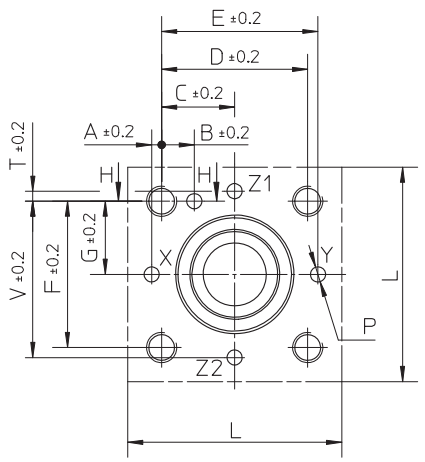

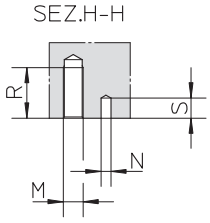

Size 80 and 100

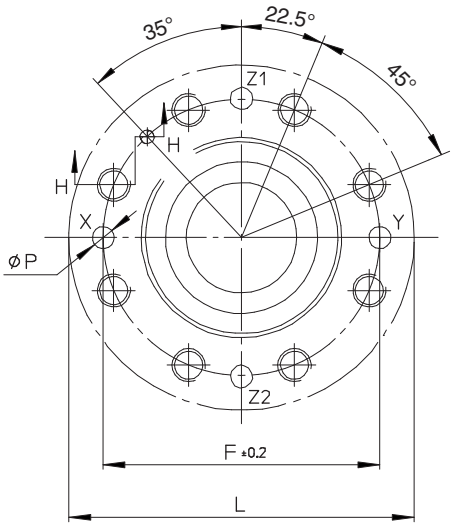

Note: port Z1 and Z2 not used

Size	A	B	C	D	E	F	G	L min	M	Ø N	P max	R	S min	T	V
50	8	20	50	100	108	100	50	140	M20	8	10	46	8	8	108
63	12.5	24.5	62.5	125	137.5	125	62.5	180	M30	8	12	66	8	12.5	137.5
80	-	-	-	-	-	Ø200	-	Ø250	M24	10	16	50	10	-	-
100	-	-	-	-	-	Ø245	-	Ø300	M30	10	20	63	10	-	-

10 ISO 7368 CAVITIES DIMENSIONS for 2 WAY LIQZH CARTRIDGE VALVES [mm]

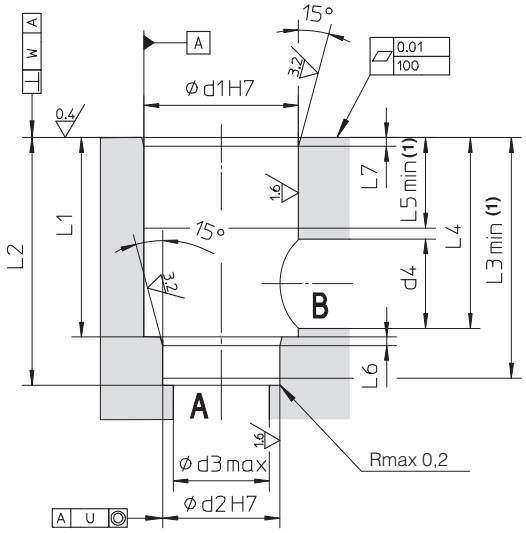

For sizes 50 and 63 the dimension D4max is the difference between L4 and L5min

General Tolerances ISO 2768-mH (except chamfers and radius)

Dimensions can differ from ISO 7368 standards

(1) Minimum length over which the specific surface finish and H7 tolerance shall apply
(2) Smaller diameter can cause a decrease in flow rate

Size	ød1	ød2	ød3 max **(2)**	ød4 max **(2)**	L1	L2	L3	L4	L5	L6	L7	U	W
50	90	68	62.5	62.5	$100^{+0,1}_{0}$	$122^{+0,1}_{0}$	117	97.5	35	3	3	0.05	0.1
63	120	90	87	87	$130^{+0,1}_{0}$	$155^{+0,1}_{0}$	150	127	40	4	4	0.05	0.2
80	145	110	110	110	$175^{+0,2}_{0}$	$205^{+0,2}_{0}$	200	170.5	40	5	5	0.05	0.2
100	180	135	135	135	$210^{+0,2}_{0}$	$245^{+0,2}_{0}$	239	205.5	50	5	5	0.05	0.2