Digital proportional 2-way cartridges high performance

piloted, with on-board driver and LVDT transducer

Availability and price only on request

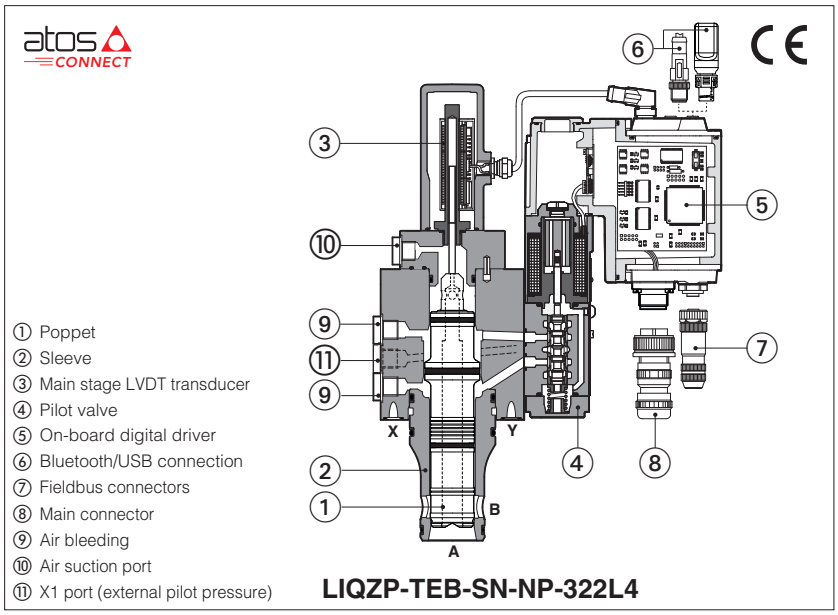

LIQZP-TEB

Digital high performance 2-way proportional cartridges specifically designed for speed controls.
They are equipped with LVDT main stage position transducer for best dynamics in not compensated flow regulations.
The cartridge execution for blocks installation grants high flow capabilities and minimized pressure drops.

TEB basic execution with analog reference signal or IO-Link interface for digital reference signals, valve settings, and real-time diagnostics.

Bluetooth/USB connection is always present for valve settings via mobile App and Atos PC software.

Size: **16** ÷ **100** - ISO 7368
Max flow: **600** ÷ **16000 l/min**
Max pressure: **420 bar**

1 MODEL CODE

*	-	LIQZP	-	TEB	-	SN	-	NP	-	40	2	L4	/	*	*	*	/	*

Special code
omit for size 16 to 50
10*119 for size 63
13*114 for size 80
19*110 for size 100

Proportional 2-way cartridge, piloted
LIQZP

TEB = basic on-board digital driver

Alternated p/Q controls:
SN = none

IO-Link interface, see section 5 :
NP = Not present **IL** = IO-Link

Valve size ISO 7368, see section 7 :

Size	**16**	**25**	**32**	**40**
l/min	250	500	800	1200
Size	**50**	**63**	**80**	**100**
l/min	2000	3000	4500	7200

Nominal flow (l/min) at Δp 5 bar

Configuration:
2 = 2 way

functional symbol

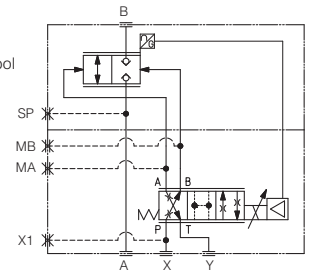

simplified symbol

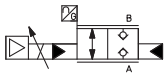

Poppet type, regulating characteristics, see section 10 :
L4 = linear

Electronic options (1), not available for TEB-SN-IL:
F = fault signal
I = current reference input and monitor 4 ÷ 20 mA
Q = enable signal
Z = enable, fault and monitor signals - 12 pin connector

Bluetooth option (1), see section 4 :
T = Bluetooth adapter supplied with the valve

Series number

Seals material, see section 9 :
- = NBR
PE = FKM
BT = NBR low temp.

(1) Possible combined options: /FI, /IQ, /IZ (/T Bluetooth adapter option can be combined with all other options)

2 GENERAL NOTES

Atos digital proportionals valves are CE marked according to the applicable directives (e.g. Immunity and Emission EMC Directive).
Installation, wirings and start-up procedures must be performed according to the general prescriptions shown in tech table **FS900** and in the user manuals included in the E-SW-SETUP programming software.

WARNING

To avoid overheating and possible damage of the electronic driver, the valves must be never energized without hydraulic supply to the pilot stage.
In case of prolonged pauses of the valve operation during the machine cycle, it is always advisable to disable the driver (option /Q or /Z).
A safety fuse 2,5 A installed on 24VDC power supply of each valve is always recommended, see also power supply note at sections 13 .

WARNING

The loss of the pilot pressure causes the undefined position of the main poppet.
The sudden interruption of the power supply during the valve operation causes the immediate shut-off of the main poppet.
This could cause pressure surges in the hydraulic system or high decelerations which may lead to machine damages.

3 VALVE SETTINGS AND PROGRAMMING TOOLS - see tech. table **GS500**

3.1 Atos CONNECT mobile App

Free downloadable App for smartphones and tablets which allows quick access to valve main functional parameters and basic diagnostic information via Bluetooth, thus avoiding physical cable connection and significantly reducing commissioning time.
Atos CONNECT supports Atos digital valve drivers equipped with E-A-BTH adapter or with built-in Bluetooth. It does not support valves with p/Q control or axis controls.

Download on the App Store

GET IT ON Google Play

3.2 E-SW-SETUP PC software

Free downloadable software for PC allows to set all valve functional parameters and to access complete diagnostic information of digital valve drivers via Bluetooth/USB service port.
Atos E-SW-SETUP PC software supports all Atos digital valve drivers and it is available at www.atos.com in MyAtos area.

WARNING: drivers USB port is not isolated! For E-C-SB-USB/M12 cable, the use of E-A-SB-USB/OPT isolator adapter is highly recommended for PC protection

Bluetooth or USB connection

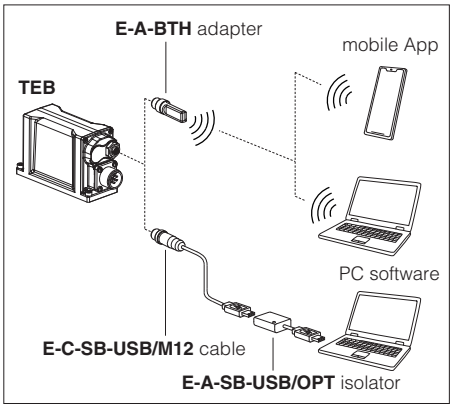

4 BLUETOOTH OPTION - see tech. table **GS500**

T option adds Bluetooth® connectivity to Atos valve drivers thanks to E-A-BTH adapter, which can be left permanently installed on-board, to allow the Bluetooth connection with the valve drivers at any time. E-A-BTH adapter can also be purchased separately and used to connect with any supported Atos digital product.
Bluetooth connection to the valve can be protected against unauthorised access by setting a personal password. The adapter leds visually indicates the status of valve driver and Bluetooth connection.

WARNING: for the list of countries where the Bluetooth adapter has been approved, see tech. table **GS500**
T option is not available for the Indian market, so the Bluetooth adapter must be ordered separately.

5 IO-LINK - only for **LEB**, see tech. table **GS520**

IO-Link allows low cost digital communication between the valve and machine central unit. The valve is directly connected to a port of an IO-Link master (point-to-point connection) via low-cost unshielded cables for digital reference, diagnostic and settings. The IO-Link master works as a hub exchanging this information with the machine central unit via fieldbus.

6 GENERAL CHARACTERISTICS

Assembly position	Any position
Subplate surface finishing to ISO 4401	Acceptable roughness index: Ra ≤0,8, recommended Ra 0,4 – Flatness ratio 0,01/100
MTTFd valves according to EN ISO 13849	75 years, for futher details see technical table P007
Ambient temperature range	**Standard** = -20°C ÷ +60°C **/PE** option = -20°C ÷ +60°C **/BT** option = -40°C ÷ +60°C
Storage temperature range	**Standard** = -20°C ÷ +70°C **/PE** option = -20°C ÷ +70°C **/BT** option = -40°C ÷ +70°C
Surface protection	Zinc coating with black passivation, galvanic treatment (driver housing)
Corrosion resistance	Salt spray test (EN ISO 9227) > 200 h
Vibration resistance	See technical table G004
Compliance	CE according to EMC directive 2014/30/EU (Immunity: EN 61000-6-2; Emission: EN 61000-6-3) RoHS Directive 2011/65/EU as last update by 2015/863/EU REACH Regulation (EC) n°1907/2006

7 HYDRAULIC CHARACTERISTICS - based on mineral oil ISO VG 46 at 50 °C

Size	16	25	32	40	50	63	80	100
Nominal flow Δp A-B [l/min]								
Δp = 5 bar	250	500	800	1200	2000	3000	4500	7200
Δp = 10 bar	350	700	1100	1700	2800	4250	6350	10200
Max permissible flow	600	1200	1800	2500	4000	6000	10000	16000
Max pressure [bar]	Ports A, B = 420 X = 350 Y ≤ 10							
Nominal flow of pilot valve at Δp = 70 bar [l/min]	43	43	43	50	50	50	50	50
Leakage of pilot valve at P = 100 bar [l/min]	0,5	0,5	0,5	0,6	0,6	0,6	0,6	0,6
Piloting pressure [bar]	min: 40% of system pressure max 350 recommended 140 ÷ 160							
Piloting volume [cm^3]	1,6		7,0	9,4	17,7	32,5	39,5	49,5
Piloting flow **(1)** [l/min]	4		12	16	21	26	27	30
Response time 0 ÷ 100% step signal [ms]	25		35	35	50	75	90	100
Hysteresis [% of the max regulation]	≤ 1							
Repeatability [% of the max regulation]	± 0,5							
Thermal drift	zero point displacement < 1% at ΔT = 40°C							

(1) With step reference input 0÷100%

8 ELECTRICAL CHARACTERISTICS

Power supplies	Nominal : +24 VDC Rectified and filtered : VRMS = 20 ÷ 32 VMAX (ripple max 10 % VPP)	
Max power consumption	50 W	
Max. solenoid current	2,6 A	
Coil resistance R at 20°C	3 ÷ 3,3 Ω	
Analog input signals	Voltage: range ±10 VDC (24 VMAX tolerant) Input impedance: Ri > 50 kΩ Current: range ±20 mA Input impedance: Ri = 500 Ω	
Monitor outputs	Output range: voltage ±10 VDC @ max 5 mA current ±20 mA @ max 500 Ω load resistance	
Enable input	Range: 0 ÷ 5 VDC (OFF state), 9 ÷ 24 VDC (ON state), 5 ÷ 9 VDC (not accepted); Input impedance: Ri > 10 kΩ	
Fault output	Output range: 0 ÷ 24 VDC (ON state > [power supply - 2 V] ; OFF state < 1 V) @ max 50 mA; external negative voltage not allowed (e.g. due to inductive loads)	
Alarms	Solenoid not connected/short circuit, cable break with current reference signal, over/under temperature, valve spool transducer malfunctions, alarms history storage function	
Insulation class	H (180°) Due to the occurring surface temperatures of the solenoid coils, the European standards ISO 13732-1 and EN982 must be taken into account	
Protection degree to DIN EN60529	IP66 / IP67 with mating connectors	
Duty factor	Continuous rating (ED=100%)	
Tropicalization	Tropical coating on electronics PCB	
Additional characteristics	Short circuit protection of solenoid's current supply; poppet position control by P.I.D. with rapid solenoid switching; protection against reverse polarity of power supply	
Communication interface	USB Atos ASCII coding	IO-Link Interface and System Specification 1.1.3
Communication physical layer	not insulated USB 2.0+USB OTG	SDCI class port B
Recommended wiring cable	LiYCY shielded cables, see section 17	

Note: a maximum time of 800 ms (depending on communication type) has to be considered between the driver energizing with the 24 VDC power supply and when the valve is ready to operate. During this time the current to the valve coils is switched to zero.

9 SEALS AND HYDRAULIC FLUIDS - for other fluids not included in below table, consult our technical office

Seals, recommended fluid temperature	NBR seals (standard) = -20°C ÷ +60°C, with HFC hydraulic fluids = -20°C ÷ +50°C FKM seals (/PE option) = -20°C ÷ +80°C NBR low temp. seals (/BT option) = -40°C ÷ +60°C, with HFC hydraulic fluids = -20°C ÷ +50°C		
Recommended viscosity	20÷100 mm^2/s - max allowed range 15 ÷ 380 mm^2/s		
Max fluid contamination level — normal operation	ISO4406 class 18/16/13 NAS1638 class 7		see also filter section at www.atos.com or KTF catalog
Max fluid contamination level — longer life	ISO4406 class 16/14/11 NAS1638 class 5		
Hydraulic fluid	**Suitable seals type**	**Classification**	**Ref. Standard**
Mineral oils	NBR, FKM, NBR low temp.	HL, HLP, HLPD, HVLP, HVLPD	DIN 51524
Flame resistant without water	FKM	HFDU, HFDR	ISO 12922
Flame resistant with water	NBR, NBR low temp.	HFC	

10 DIAGRAMS (based on mineral oil ISO VG 46 at 50 °C)

10.1 Regulation diagrams (values measured at Δp 5 bar)

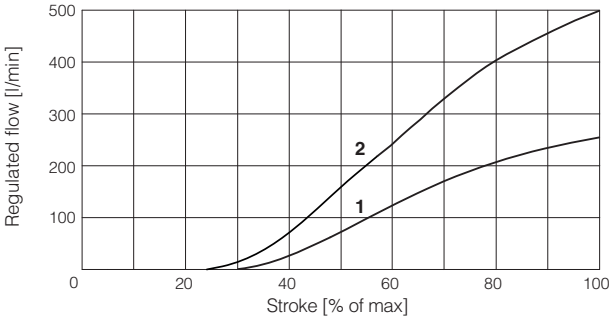

1 = LIQZP-TEB-*-162L4
2 = LIQZP-TEB-*-252L4

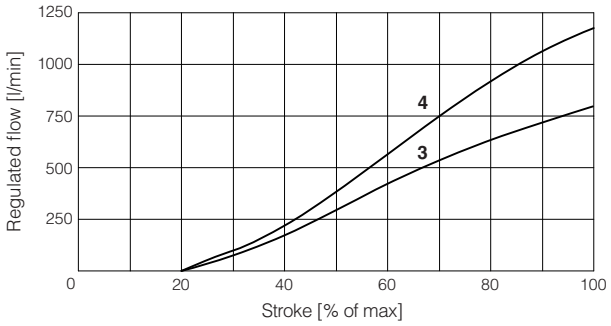

3 = LIQZP-TEB-*-322L4
4 = LIQZP-TEB-*-402L4

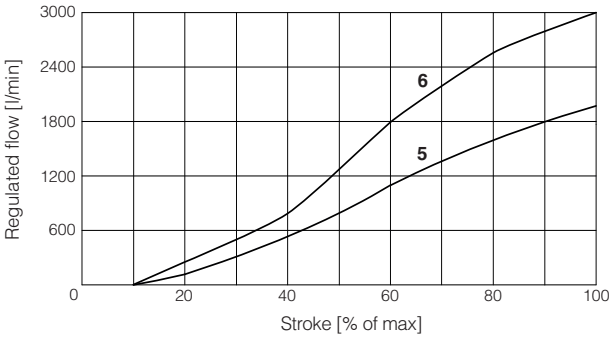

5 = LIQZP-TEB-*-502L4
6 = LIQZP-TEB-*-632L4

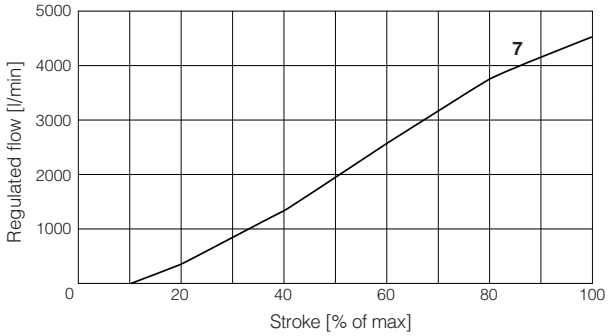

7 = LIQZP-TEB-*-802L4

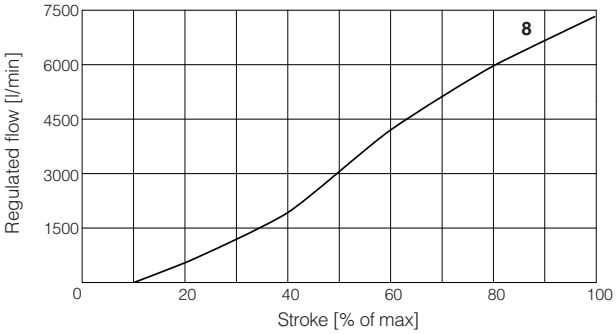

8 = LIQZP-TEB-*-1002L4

11 ELECTRONIC OPTIONS - not available for **TEB-SN-IL**

F = This option permits to monitor the eventual fault condition of the driver, as for example the solenoid short circuit/not connected, reference signal cable broken for option /I, poppet position transducer broken, etc. - see 14.6 for signal specifications.

I = This option provides 4 ÷ 20 mA current reference and monitor signals, instead of the standard 0 ÷ 10 VDC.
Input signal can be reconfigured via software selecting between voltage and current, within a maximum range of ±10 VDC or ±20 mA.
It is normally used in case of long distance between the machine control unit and the valve or where the reference signal can be affected by electrical noise; the valve functioning is disabled in case of reference signal cable breakage.

Q = This option permits to inhibit the valve function without removing the power supply to the driver. Upon disable command the current to the solenoid is zeroed and the valve's poppet moves to rest position.
The option /Q is suggested for all cases where the valve has to be frequently inhibited during the machine cycle – see 14.4 for signal specifications.

Z = This option provides, on the 12 pin main connector, the following additional features:
Fault output signal - see above option **/F**
Enable input signal - see above option **/Q**
Repeat enable output signal - only for **TEB-SN-NP** (see 14.5)

12 POSSIBLE COMBINED OPTIONS

/FI, /IQ, /IZ

Note: **/T** Bluetooth adapter option can be combined with all other options

13 ADDITIONAL EXTERNAL PILOT PORT CONNECTION

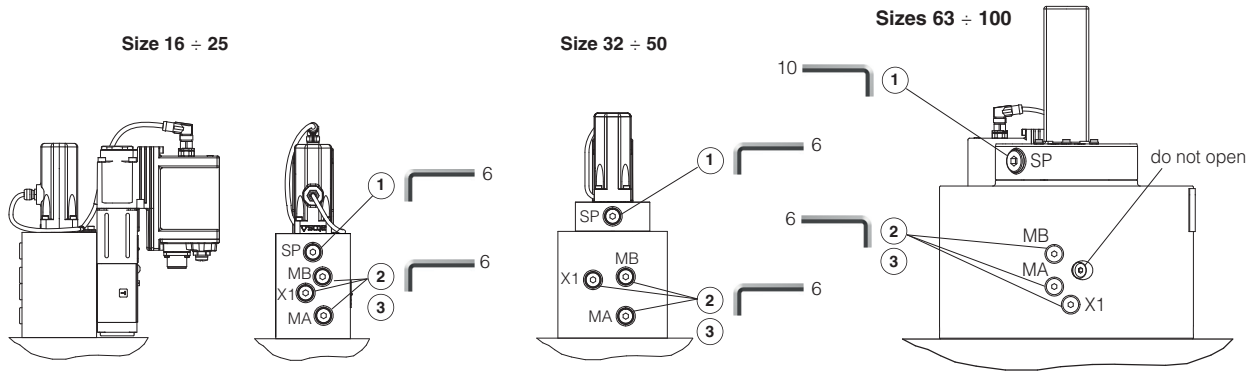

(1) **Air suction port (SP):**

N° 1 plug G1/4" for sizes 16 to 50
N° 1 plug G1/2" for sizes 63 to 100

To be used only in case port A is connected to tank and subjected to negative pressure, consult our technical office.

(2) **Air bleeding (MA, MB):**

N° 2 plugs G1/4" for size 16 to 100

At the machine commissioning it is advisable to bleed the air from piloting chambers, by loosening the 2 plugs shown in the picture.

Operate the valve for few seconds at low pressure and then lock the plugs.

(3) **External pilot pressure (X1):**

N° 1 plugs G1/4" for sizes 16 to 100

14 POWER SUPPLY AND SIGNALS SPECIFICATIONS

Generic electrical output signals of the valve (e.g. fault or monitor signals) must not be directly used to activate safety functions, like to switch-ON/OFF the machine's safety components, as prescribed by the European standards (Safety requirements of fluid technology systems and components-hydraulics, ISO 4413).

For **TEB-SN-IL** signals see section 15

14.1 Power supply (V+ and V0)

The power supply must be appropriately stabilized or rectified and filtered: apply at least a 10000 µF/40 V capacitance to single phase rectifiers or a 4700 µF/40 V capacitance to three phase rectifiers.

⚠ A safety fuse is required in series to each power supply: 2,5 A time lag fuse.

14.2 Flow reference input signal (Q_INPUT+)

The driver controls in closed loop the valve spool position proportionally to the external reference input signal.
Reference input signal is factory preset according to selected valve code, defaults are 0 ÷ 10 VDC for standard and 4 ÷ 20 mA for /I option.
Input signal can be reconfigured via software selecting between voltage and current, within a maximum range of ±10 VDC or ± 20 mA.
Drivers with fieldbus interface can be software set to receive reference signal directly from the machine control unit (fieldbus reference).
Analog reference input signal can be used as on-off commands with input range 0 ÷ 24VDC.

14.3 Flow monitor output signal (Q_MONITOR) - not for /F

The driver generates an analog output signal proportional to the actual spool position of the valve; the monitor output signal can be software set to show other signals available in the driver (e.g. analog reference, fieldbus reference, pilot spool position).
Monitor output signal is factory preset according to selected valve code, defaults are 0 ÷ 10 VDC for standard and 4 ÷ 20 mA for /I option.
Output signal can be reconfigured via software selecting between voltage and current, within a maximum range of ±10 VDC or ± 20 mA.

14.4 Enable input signal (ENABLE) - not for standard and /F

To enable the driver, supply a 24 VDC on pin 3 (pin C): Enable input signal allows to enable/disable the current supply to the solenoid, without removing the electrical power supply to the driver; it is used to active the communication and the other driver functions when the valve must be disabled for safety reasons. This condition **does not comply** with norms IEC 61508 and ISO 13849.
Enable input signal can be used as generic digital input by software selection.

14.5 Repeat enable output signal (R_ENABLE) - only for TEB-SN-NP with /Z option

Repeat enable is used as output repeater signal of enable input signal (see 14.4).

14.6 Fault output signal (FAULT) - not for standard and /Q

Fault output signal indicates fault conditions of the driver (solenoid short circuits/not connected, reference signal cable broken for 4 ÷ 20 mA input, spool position transducer cable broken, etc.). Fault presence corresponds to 0 VDC, normal working corresponds to 24 VDC.
Fault status is not affected by the Enable input signal. Fault output signal can be used as digital output by software selection.

15 IO-LINK SIGNALS SPECIFICATIONS - only for TEB-SN-IL

15.1 Power supply for IO-Link communication (L+ and L-)

The IO-Link master provides dedicated 24 VDC power supply for IO-Link communication.
Maximum power consumption: 2 W
Internal electrical isolation of power L+, L- from P24, N24

15.2 Power supply for driver's logic and valve regulation (P24 and N24)

The IO-Link master provides dedicated 24 VDC power supply for valve regulation, logics and diagnostics.
Maximum power consumption: 50 W
Internal electrical isolation of power P24, N24 from L+, L-

15.3 IO-Link data line (C/Q)

C/Q signal is used to establish communication between IO-Link master and valve.

16 ELECTRONIC CONNECTIONS AND LEDS

16.1 Main connector signals - 7 pin - standard, /F and /Q options (A1)

PIN	Standard	/Q	/F	TECHNICAL SPECIFICATIONS	NOTES
A	**V+**			Power supply 24 VDC	Input - power supply
B	**V0**			Power supply 0 VDC	Gnd - power supply
C	**AGND**		**AGND**	Analog ground	Gnd - analog signal
		ENABLE		Enable (24 VDC) or disable (0 VDC) the valve, referred to V0	Input - on/off signal
D	**Q_INPUT+**			Flow reference input signal: ±10 VDC / ±20 mA maximum range Defaults are 0 ÷ 10 VDC for standard and 4 ÷ 20 mA for /I option	Input - analog signal **Software selectable**
E	**INPUT-**			Negative reference input signal for Q_INPUT+	Input - analog signal
F	**Q_MONITOR** referred to: AGND / V0			Flow monitor output signal: ±10 VDC / ±20 mA maximum range Defaults are 0 ÷ 10 VDC for standard and 4 ÷ 20 mA for /I option	Output - analog signal **Software selectable**
			FAULT	Fault (0 VDC) or normal working (24 VDC)	Output - on/off signal
G	**EARTH**			Internally connected to the driver housing	

16.2 Main connector signal - 12 pin - /Z option (A2)

PIN	TEB-SN-NP /Z	TECHNICAL SPECIFICATIONS	NOTES
1	**V+**	Power supply 24 VDC	Input - power supply
2	**V0**	Power supply 0 VDC	Gnd - power supply
3	**ENABLE** referred to: V0	Enable (24 VDC) or disable (0 VDC) the valve	Input - on/off signal
4	**Q_INPUT+**	Flow reference input signal: ±10 VDC / ±20 mA maximum range Defaults are 0 ÷ 10 VDC for standard and 4 ÷ 20 mA for /I option	Input - analog signal **Software selectable**
5	**INPUT-**	Negative reference input signal for Q_INPUT+	Input - analog signal
6	**Q_MONITOR** referred to: AGND	Flow monitor output signal: ±10 VDC / ±20 mA maximum range Defaults are 0 ÷ 10 VDC for standard and 4 ÷ 20 mA for /I option	Input - analog signal **Software selectable**
7	**AGND**	Analog ground	Output - analog signal
8	**R_ENABLE**	Repeat enable, output repeater signal of enable input, referred to V0	Output - on/off signal
9	**NC**	Do not connect	Input - power supply
10	**NC**	Do not connect	
11	**FAULT** referred to: V0	Fault (0 VDC) or normal working (24 VDC)	Output - on/off signal
PE	**EARTH**	Internally connected to the driver housing	

16.3 IO-Link connector signals - M12 - 5 pin - Coding A, port class B (A) only for TEB-SN-IL

PIN	SIGNAL	TECHNICAL SPECIFICATIONS	NOTES
1	**L+**	Power supply 24 VDC for IO-Link communication	Input - power supply
2	**P24**	Power supply 24 VDC for valve regulation, logics and diagnostics	Input - power supply
3	**L-**	Power supply 0 VDC for IO-Link communication	Gnd - power supply
4	**C/Q**	IO-Link data line	Input / Output - signal
5	**N24**	Power supply 0 VDC for valve regulation, logics and diagnostics	Gnd - power supply

Note: L+, L- and P24, N24 are electrically isolated

16.4 Communications connectors (B) - (C)

(B) **USB connector - M12 - 5 pin** always present		
PIN	**SIGNAL**	**TECHNICAL SPECIFICATION** (1)
1	**+5V_USB**	Power supply
2	**ID**	Identification
3	**GND_USB**	Signal zero data line
4	**D-**	Data line -
5	**D+**	Data line +

(1) shield connection on connector's housing is recommended

16.5 TEB-SN-NP connections layout

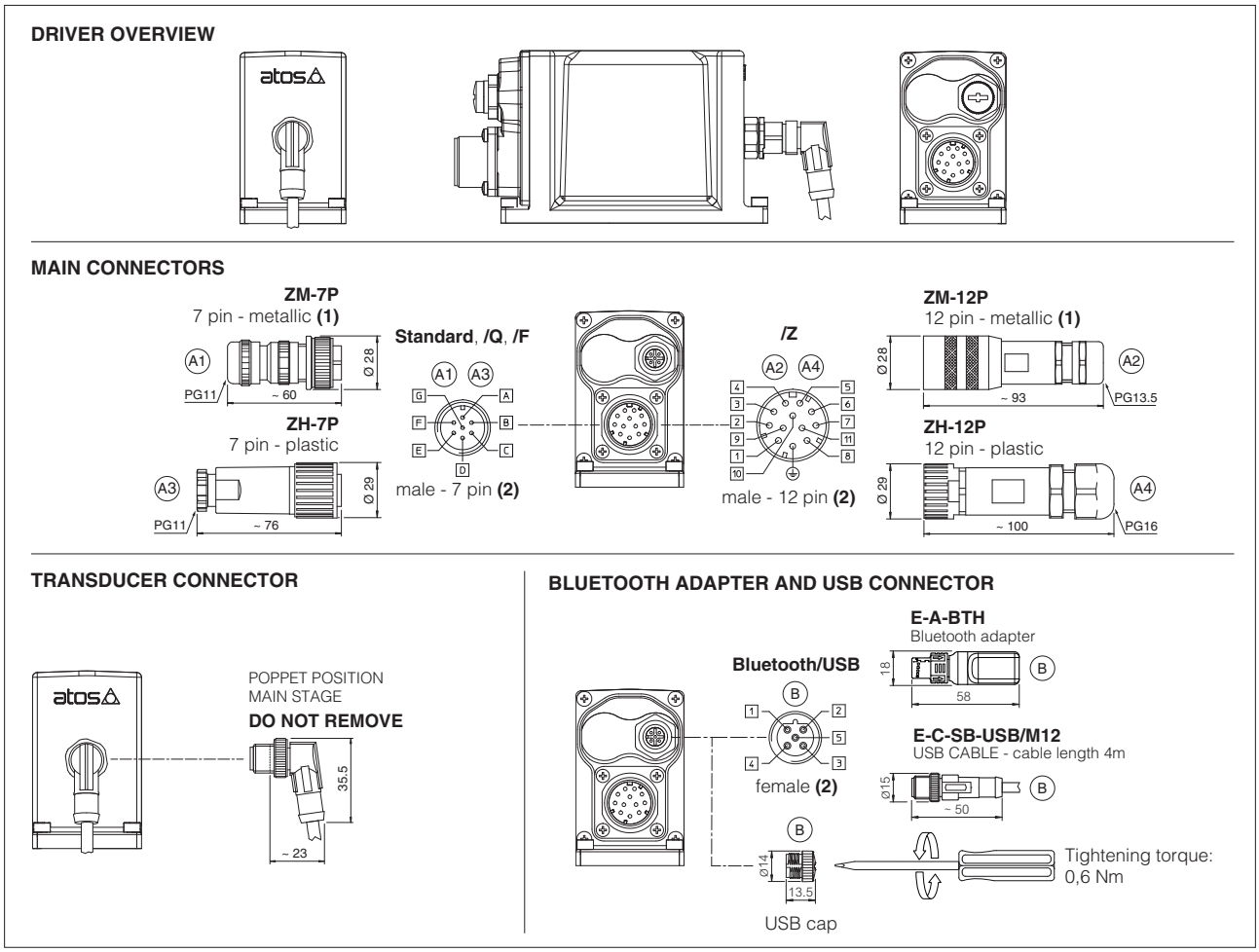

(1) Use of metallic connectors is strongly recommended in order to fulfill EMC requirements **(2)** Pin layout always referred to driver's view

16.6 TEB-SN-IL connections layout

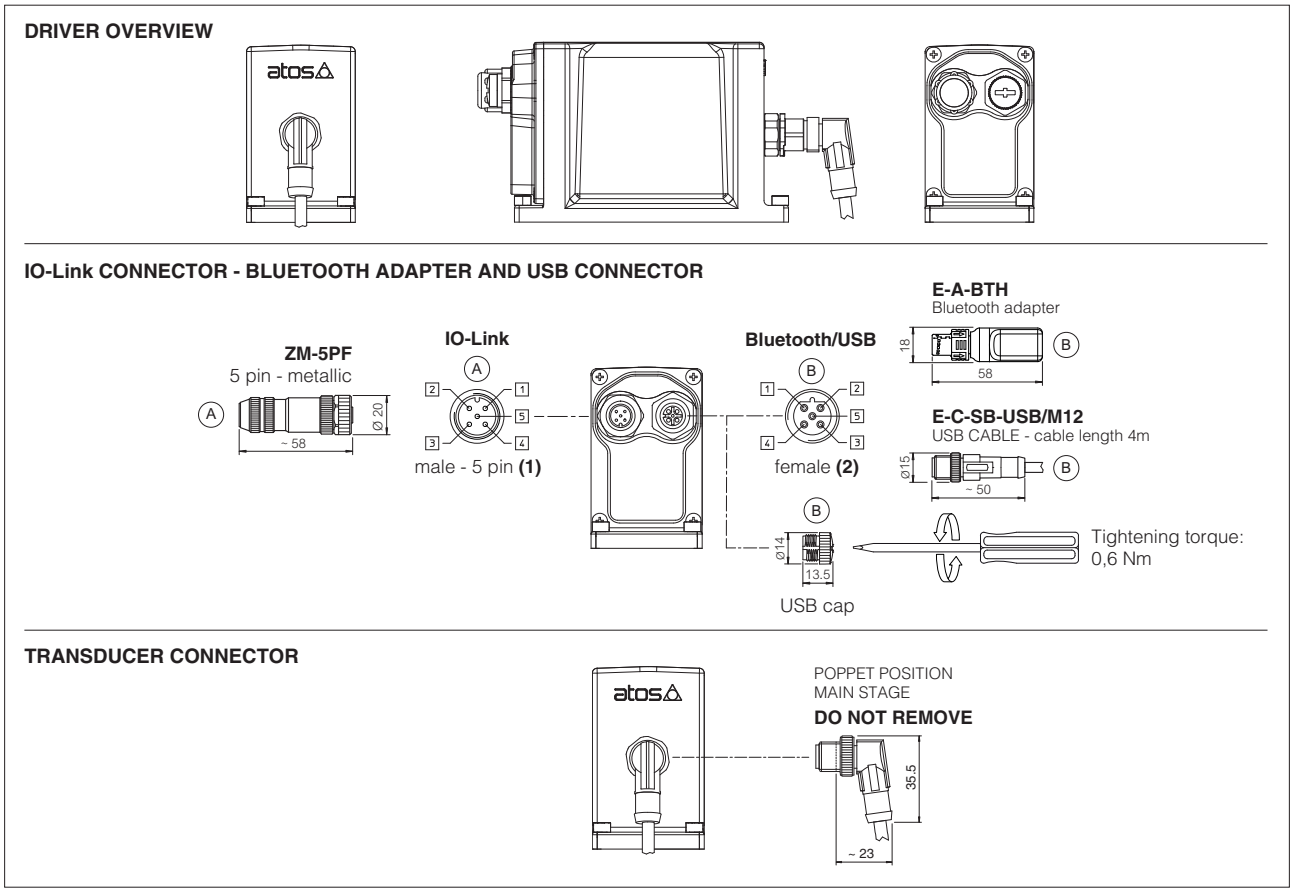

(1) Pin layout always referred to driver's view

17 CONNECTORS CHARACTERISTICS - to be ordered separately

17.1 Main connectors - 7 pin

CONNECTOR TYPE	POWER SUPPLY AND SIGNALS	POWER SUPPLY AND SIGNALS
CODE	A1 ZM-7P	A3 ZH-7P
Type	7pin female straight circular	7pin female straight circular
Standard	According to MIL-C-5015	According to MIL-C-5015
Material	Metallic	Plastic reinforced with fiber glass
Cable gland	PG11	PG11
Recommended cable	LiYCY 7 x 0,75 mm^2 max 20 m (logic and power supply) or LiYCY 7 x 1 mm^2 max 40 m (logic and power supply)	LiYCY 7 x 0,75 mm^2 max 20 m (logic and power supply) or LiYCY 7 x 1 mm^2 max 40 m (logic and power supply)
Conductor size	up to 1 mm^2 - available for 7 wires	up to 1 mm^2 - available for 7 wires
Connection type	to solder	to solder
Protection (EN 60529)	IP 67	IP 67

17.2 Main connectors - 12 pin

CONNECTOR TYPE	POWER SUPPLY AND SIGNALS	POWER SUPPLY AND SIGNALS
CODE	A2 ZM-12P	A4 ZH-12P
Type	12pin female straight circular	12pin female straight circular
Standard	DIN 43651	DIN 43651
Material	Metallic	Plastic reinforced with fiber glass
Cable gland	PG13,5	PG16
Recommended cable	LiYCY 12 x 0,75 mm^2 max 20 m (logic and power supply)	LiYCY 10 x 0,14mm^2 max 40 m (logic) LiYY 3 x 1mm^2 max 40 m (power supply)
Conductor size	0,5 mm^2 to 1,5 mm^2 - available for 12 wires	0,14 mm^2 to 0,5 mm^2 - available for 9 wires 0,5 mm^2 to 1,5 mm^2 - available for 3 wires
Connection type	to crimp	to crimp
Protection (EN 60529)	IP 67	IP 67

17.3 IO-Link connector - only for TEB-SN-IL

CONNECTOR TYPE	IL IO-Link
CODE	A ZM-5PF
Type	5pin female straight circular
Standard	M12 coding A – IEC 61076-2-101
Material	Metallic
Cable gland	Pressure nut - cable diameter 6÷8 mm
Recommended cable	5 x 0,75 mm^2 max 20 m
Connection type	screw terminal
Protection (EN 60529)	IP 67

18 FASTENING BOLTS AND VALVE MASS

Type	Size	Fastening bolts (1)	Mass [kg]
LIQZP	16	4 socket head screws M8x90 class 12.9 Tightening torque = 35 Nm	6,2
	25	4 socket head screws M12x100 class 12.9 Tightening torque = 125 Nm	8,8
	32	4 socket head screws M16x60 class 12.9 Tightening torque = 300 Nm	11,2
	40	4 socket head screws M20x70 class 12.9 Tightening torque = 600 Nm	17,3
	50	4 socket head screws M20x80 class 12.9 Tightening torque = 600 Nm	24,6
	63	4 socket head screws M30x120 class 12.9 Tightening torque = 2100 Nm	44,6
	80	8 socket head screws M24x80 class 12.9 Tightening torque = 1000 Nm	72,2
	100	8 socket head screws M30x120 class 12.9 Tightening torque = 2100 Nm	125

(1) Fastening bolts supplied with the valve

19 MAIN CONNECTORS INSTALLATION DIMENSIONS

Installation 1 - possible interference between manifold and main connector

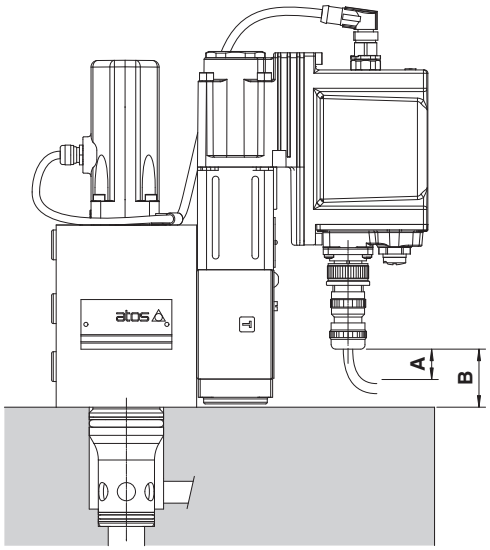

A = 15 mm space to remove the 7 or 12 pin main connectors

B = Clearance between main connector to valve's mounting surface. See the below table to verify eventual interferences, depending to the valve size and connector type

Installation 2 - no interference

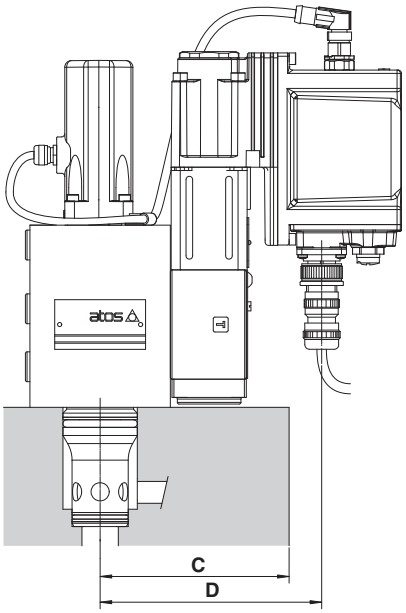

C = Max manifold dimension to avoid interference with the main connector, see below table

Reference dimension	Main connector code	Valve size							
		16	25	32	40	50	63	80	100
B	ZM-7P	32	32	32	32	45	68	68	80
	ZH-7P	**(1)**	**(1)**	**(1)**	**(1)**	29	52	52	64
	ZM-12P	**(1)**	**(1)**	**(1)**	**(1)**	**(1)**	35	35	47
	ZH-12P	**(1)**	**(1)**	**(1)**	**(1)**	**(1)**	**(1)**	**(2)**	40
C (max)	-	104	114	121	134	141	172	202	229
D	-	124	134	141	154	161	192	222	249

Above dimenions refer to the main connector fully screwed to driver's connector. The space **A** = 15 mm to remove the connector must be considered

(1) The connector installation can be performed only if the valve's driver protrudes from the edge of the relevant mounting manifold as rapresented in above "Installation 2"

(2) The connector installation may be critic, depending to the cable size and bending radius

20 INSTALLATION DIMENSIONS [mm]

LIQZP-TEB-*-162

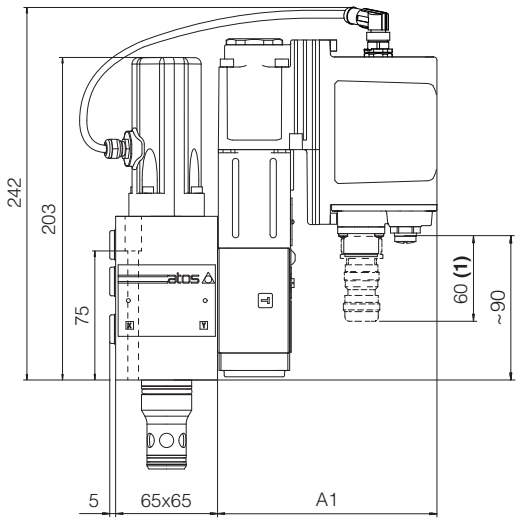

LIQZP-TEB-*-252

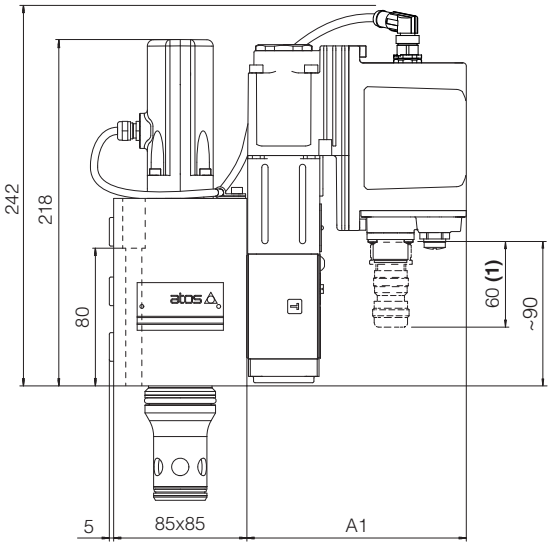

LIQZP-TEB-*-322

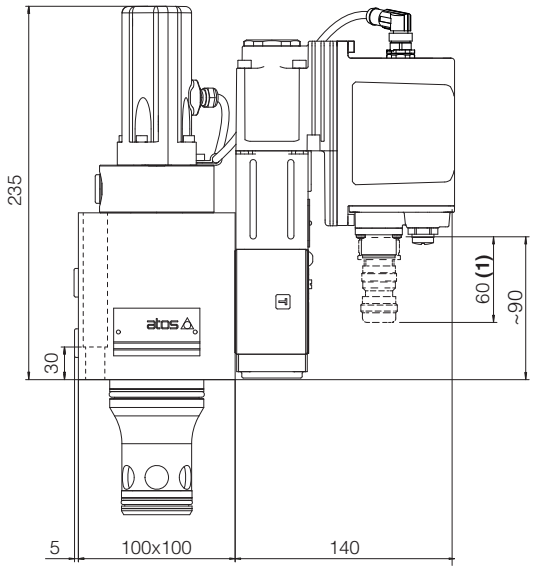

LIQZP-TEB-*-402

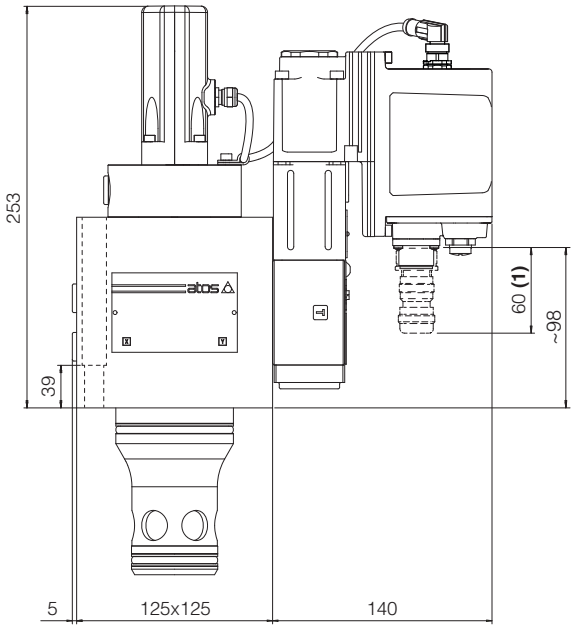

(1) The indicated dimension refers to the main connector ZM-7P. See section 19 for main connectors installation dimensions

Note: for mounting surface and cavity dimensions, see table P006

LIQZP-TEB-502

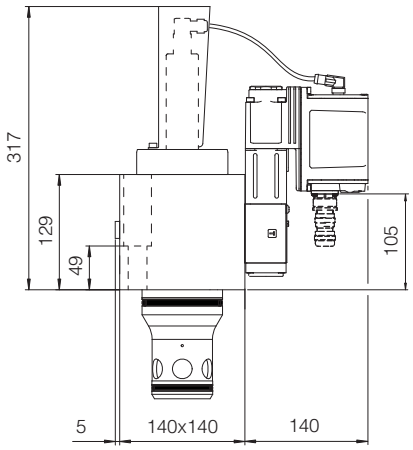

10*119 LIQZP-TEB-632

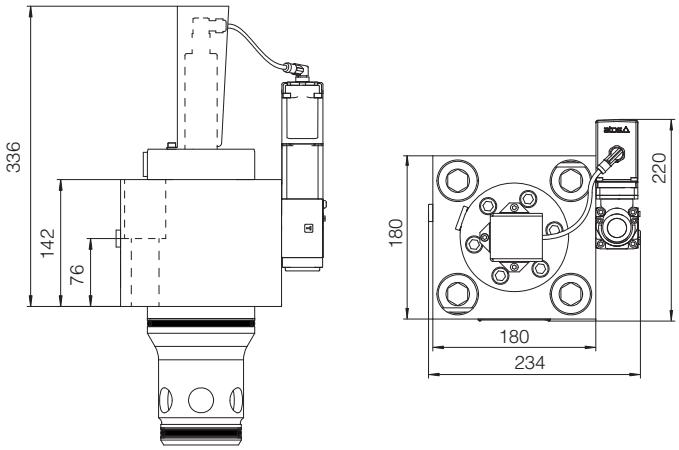

131*114 LIQZP-TEB-802

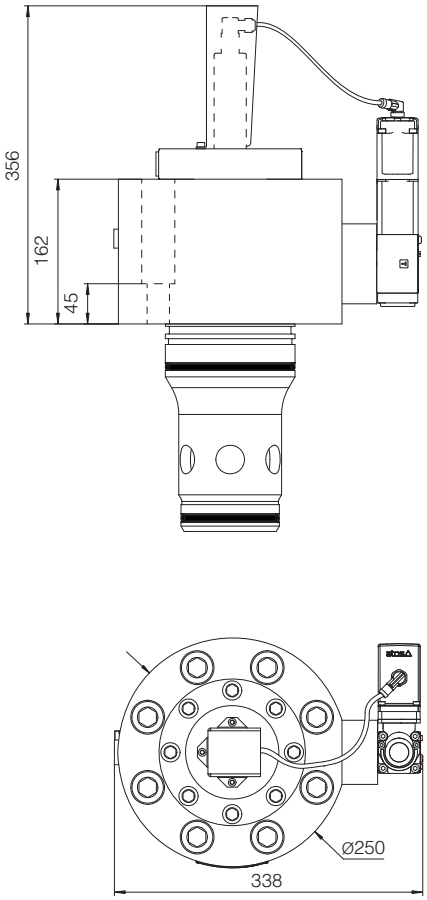

19*110 LIQZP-TEB-1002

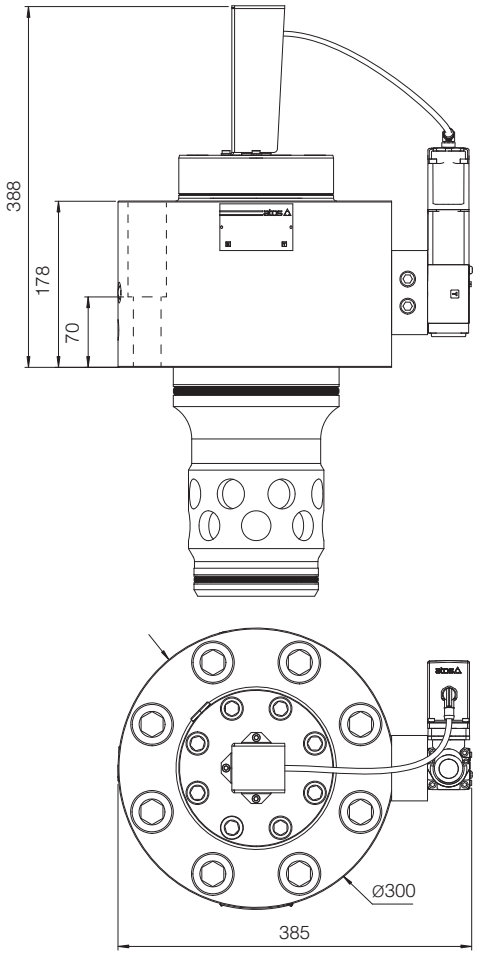

Note: for mounting surface and cavity dimensions, see table P006

21 RELATED DOCUMENTATION

FS001	Basics for digital electrohydraulics	**K800**	Electric and electronic connectors
FS900	Operating and maintenance information for proportional valves	**P006**	Mounting surfaces and cavities for cartridge valves
GS500	Programming tools	**QB340**	Quickstart for TEB valves commissioning
GS520	IO-Link interface	**E-MAN-RI-LEB**	TEB/LEB user manual