Stainless steel safety pressure relief valves

direct, screw-in cartridges, conforming to PED Directive 2014/68/EU - certified by DEKRA

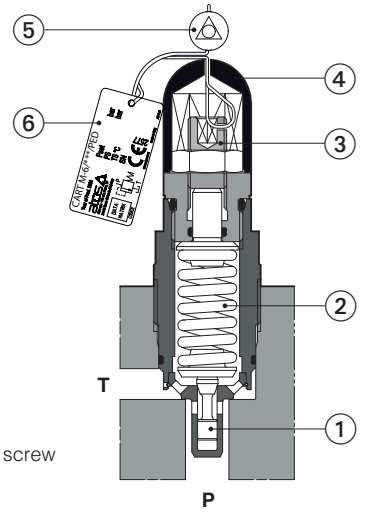

① Poppet
② Spring
③ Pressure adjustment screw (lead sealed)
④ Plastic cap
⑤ Lead sealing
⑥ Nameplate with factory pressure setting

CART MX-6/*/PED**

CART /PED

Safety pressure relief valves, certified by DEKRA according to Pressure Equipment Directive 2014/68/EU (PED).

They are designed to operate as safety components, limiting the maximum system pressure or to protect parts of the hydraulic circuit and accumulators from overpressure.

The valves are made in two different stainless steel executions for corrosive environments and fluids:

- **X** full stainless steel for external and internal parts, to withstand extreme and corrosive environmental conditions, and to ensure full compatibility also with water base and special fluids.
- **XS** stainless steel only for external parts to withstand extreme and corrosive environmental conditions.

Size: **G1/2" ÷ M35**
Max flow: **2,5 ÷ 150 l/min**
Max pressure: up to **420 bar**

1 MODEL CODE

CART	MX-3	/	420	/	PED	/	*	*	/	*	/	*

CART: Screw-in pressure relief cartridge

MX-3: Size and stainless steel executions **(1)**:

MX-3, MXS-3	= G1/2"
MX-6, MXS-6	= M33x1,5
AREX-20, AREXS-20	= M35x1,5

420: **Max pressure**:
420 = 420 bar

PED = safety version certified by DEKRA according to 2014/68/EU

***** (factory pressure setting): **Factory pressure setting** (bar):
280 = factory preset regulation to be defined depending to the customer requirements (example 280 = 280 bar)
min step: 1bar
min pressure setting: 25/30 bar see section 4

***** (series number): Series number

***** (seals material): **Seals material**, see section 5:
- = NBR low temperature -40°C
PE = FKM

***** (test fluid): **Test fluid**, only for X execution: **(2)**
H = mineral oil
W = pure water

(1) **X** = Full stainless steel **XS** = Stainless steel only for external parts
See section 5 for material specification

(2) CART MX and CART AREX in full stainless steel execution are factory tested with mineral oil or pure water in order to avoid the contamination of the end user system. At the end of each valve model code must be specified the type of fluid to be used in the valve's testing: "**H**" for hydraulic oil or "**W**" for pure water.

2 HYDRAULIC SYMBOL

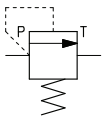

CART-*X/PED

CART-*XS/PED

3 GENERAL CHARACTERISTICS

Assembly position / location	Any position
Cavity	See section 10
MTTFd values according to EN ISO 13849	150 years, for further details see technical table P007
Ambient temperature	**Standard** = -40°C ÷ +70°C **/PE** option = -20°C ÷ +70°C
Storage temperature range	**Standard** = -40°C ÷ +80°C **/PE** option = -20°C ÷ +80°C
Compliance	PED Directive 2014/68/EU - EU type-examination certificate **(1)** RoHS Directive 2011/65/EU as last update by 2015/863/EU REACH Regulation (EC) n°1907/2006

(1) The type-examination certificate can be download from www.atos.com

4 HYDRAULIC CHARACTERISTICS

Valve model		CART MX(S)-3 /PED	CART MX(S)-6 /PED	CART AREX(S)-20 /PED
Max pressure setting	[bar]	420	420	420
Pressure range **(1)**	[bar]	25÷420	25÷420	30÷420
Max flow	[l/min]	2,5	60	150

(1) The values correspond to the min and max regulation of the valve's craking pressure

5 MATERIALS SPECIFICATION

Valve code	Valve type	Valve body	Internal parts	Spring	Seals	
					std	/PE
CART-*X	Screw-in	AISI 316L	AISI 316L, 420B, 440C	AISI 302	NBR 70 Sh low temp	FKM (viton)
CART-*XS	Screw-in	AISI 316L	Carbon steel	AISI 302	NBR 70 Sh low temp	FKM (viton)

6 SEALS AND HYDRAULIC FLUIDS - for other fluids not included in below table, consult our technical office

Seals, recommended fluid temperature **(1)**	NBR low temp. seals (standard) = -40°C ÷ +60°C FKM seals (/PE option) = -20°C ÷ +80°C		
Recommended viscosity	15÷100 mm²/s - max allowed range 2.8 ÷ 500 mm²/s min = 0,9 mm²/s for X full stainless steel execution with pure water		
Max fluid contamination level	ISO4406 class 20/18/15 NAS1638 class 9, see also filter section at www.atos.com or KTF catalog		
Hydraulic fluid	**Suitable seals type**	**Classification**	**Ref. Standard**
Mineral oils	NBR low temp., FKM	HL, HLP, HLPD, HVLP, HVLPD	DIN 51524
Flame resistant without water	FKM	HFDU, HFDR	ISO 12922
Flame resistant with water	NBR low temp.	HFA-E, HFA-S, HFB, HFC	

(1) The operating temperature of the fluid must be compatible with the maximum viscosity range allowed for the valve

7 FACTORY PRESSURE SETTING

The /PED valves are factory set at the pressure level required by the costumer (min step: 1bar). The factory pressure setting is performed at the flow shown in the following table. The factory pressure setting is marked on the valve nameplate, see section 8

VALVE MODEL	FLOW FOR FACTORY PRESSURE SETTING (l/min)
CART MX-3 CART MXS-3	0.5
CART MX-6 CART MXS-6	2
CART AREX-20 CART AREXS-20	2

⚠ Any tampering of the lead sealing invalidates the certification

8 NAMEPLATE MARKING

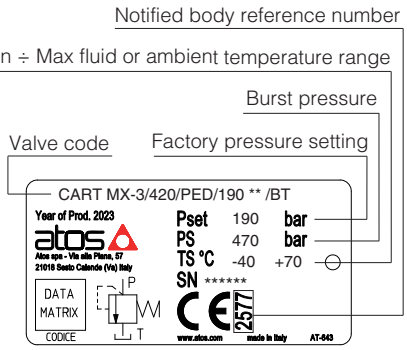

Note: **TS** values are referred to the extreme temperatures, regardless of whether the fluid or the ambient

9 PERMITTED WORKING RANGE (based on mineral oil ISO VG 46 at 50°C)

CART MX(S)-3 **/PED

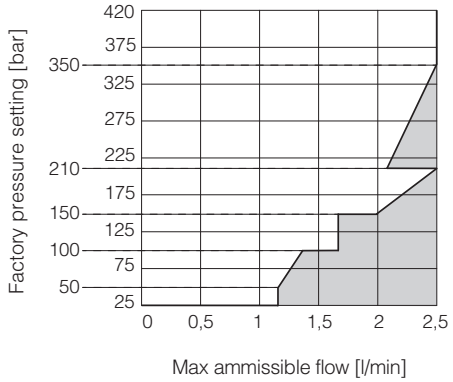

CART MX(S)-6 **/PED

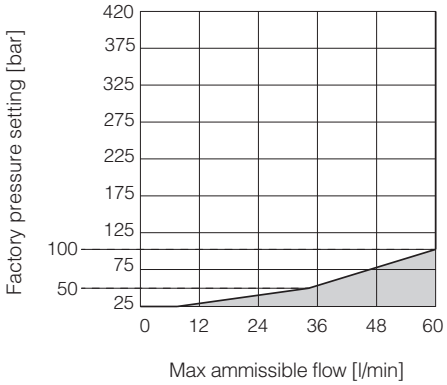

CART AREX(S)-20 **/PED

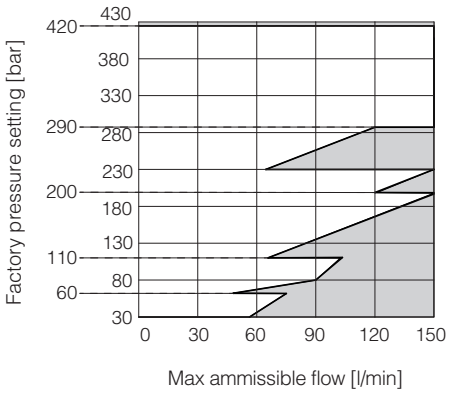

Notes:

1) The valves can operate only in the white area of the above diagrams.
The max admissible flow values within the white area are those for which the pressure increase remains within **+10% with respect to the factory pressure setting.**
Pressure / flow values located in gray areas cannot be performed.

⚠ Before ordering the valve, check that the maximum admissible flow at the required pressure setting, is greater than the maximum flow rate of the system or the accumulator to be protected.

2) The working range in above diagrams is valid without counterpressure in T line.
The factory pressure setting is increased by the counterpressure valve in T line.
As general rule PED valves should be operated without counter pressure in the T line.
In case of counter pressure in T line, the maximum admissible flow has to be reduced with respect to the values reported in the diagram, so as not to exceed the limit of +10% with respect to the factory pressure setting. Contact Atos technical office for details.

10 CAVITY AND INSTALLATION DIMENSIONS [mm]

CART MX(S)-3

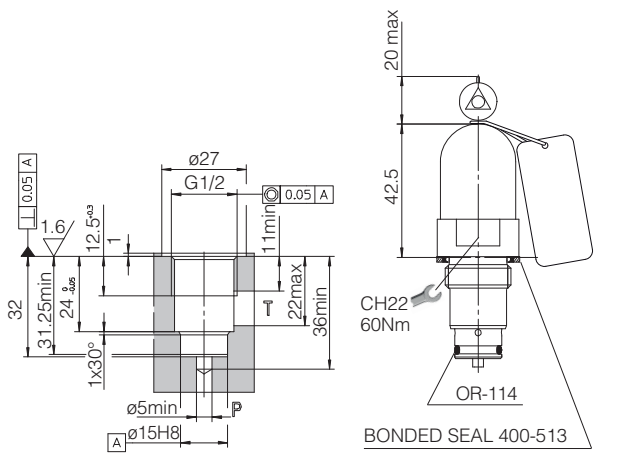

Mass [kg]	0,12

CART MX(S)-6

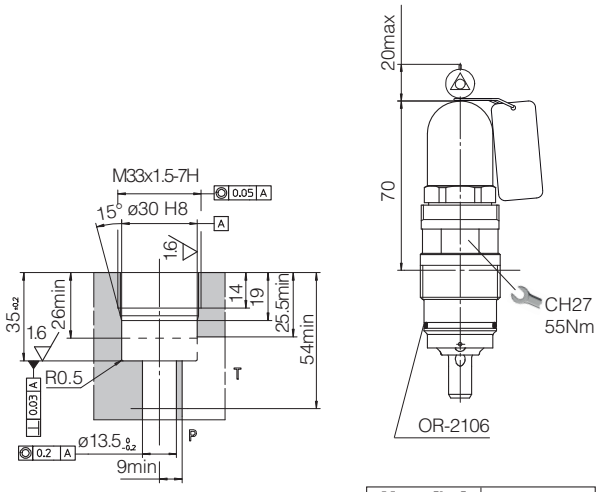

Mass [kg]	0,37

CART AREX(S)-20

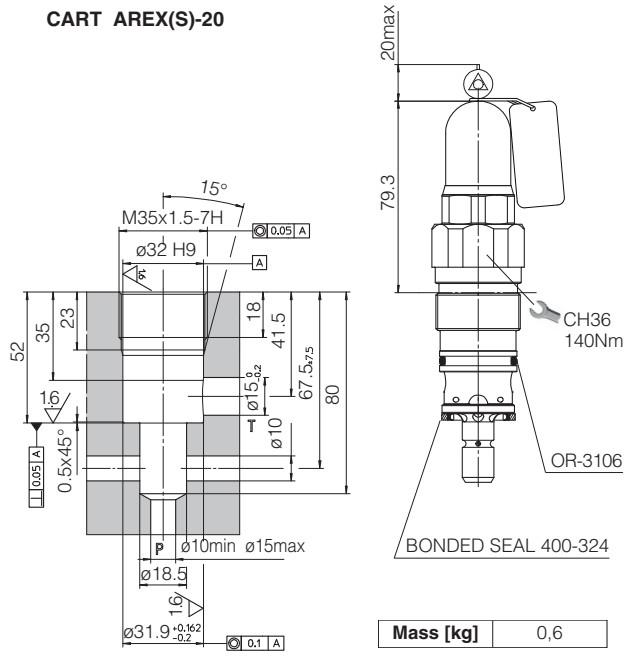

Mass [kg]	0,6

11 RELATED DOCUMENTATION

W010	Basics for electrohydraulics in corrosive environments
W020	Summary of Atos stainless steel components
CWY900	Operating and maintenance information for stainless steel PED pressure relief valves